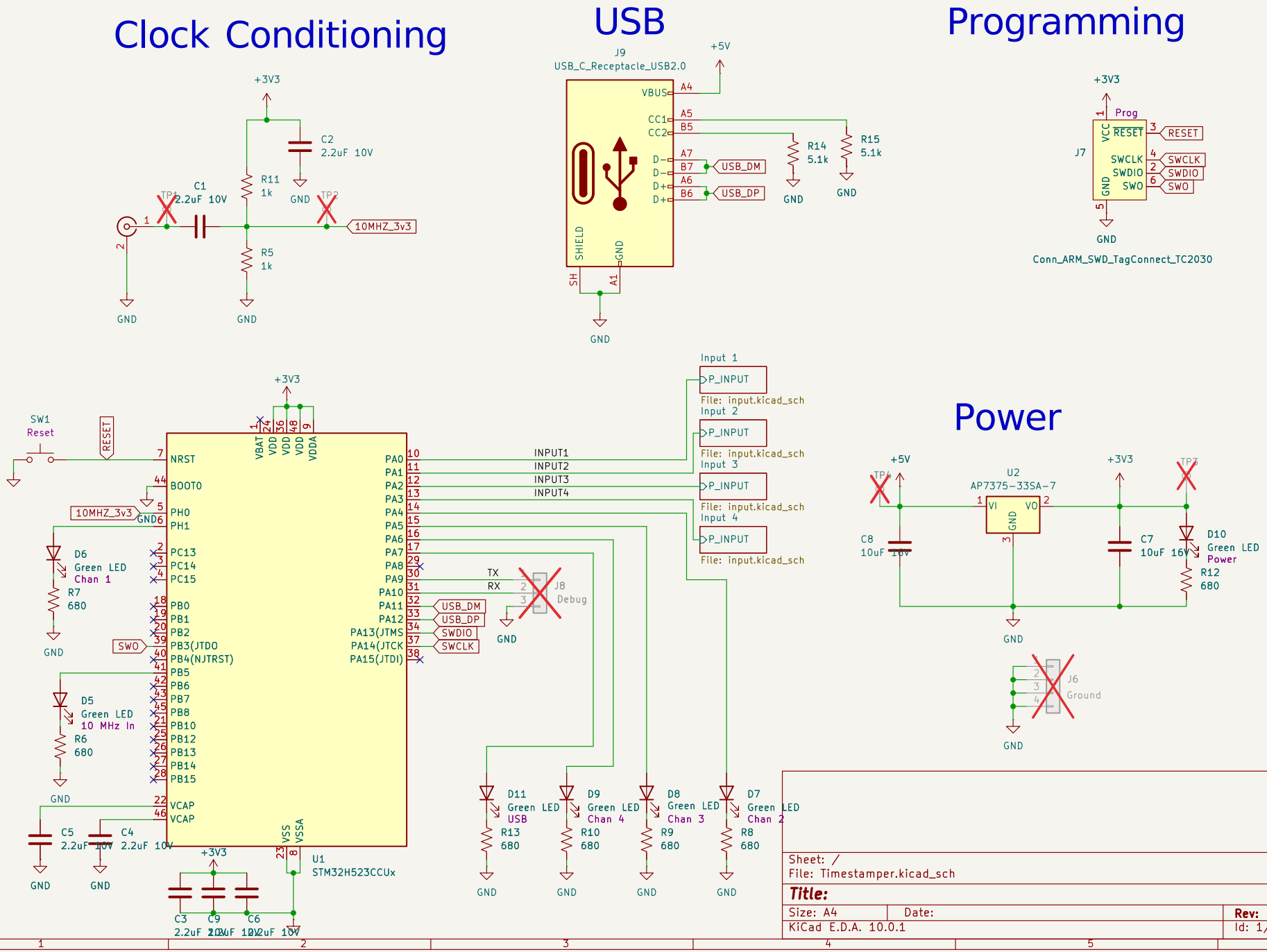
Clock Conditioning
+3V3
C2
2.2uF 10V
C1
2.2uF 10V
R11
1k
R5
1k
TP1
TP2
10MHZ_3v3
GND
USB
J9
USB_C_Receptacle_USB2.0
+5V
VBUS
CC1
CC2
D-
D-
D+
D+
SHIELD
GND
SH
A1
USB_DM
USB_DP
R14
5.1k
R15
5.1k
Programming
J7
Prog
VCC
RESET
SWCLK
SWDIO
SWO
GND
Conn_ARM_SWD_TagConnect_TC2030
Power
U2
AP7375-33SA-7
VI
VO
C8
10uF 10V
C7
10uF 16V
D10
Green LED
Power
R12
680
TP4
TP3
J6
Ground
SW1
Reset
NRST
BOOT0
PH0
PH1
PC13
PC14
PC15
PB0
PB1
PB2
PB3(JTDO
PB4(NJTRST)
PB5
PB6
PB7
PB8
PB10
PB12
PB13
PB14
PB15
VCAP
VCAP
VBAT
VDD
VDDA
VSS
VSSA
PA0
PA1
PA2
PA3
PA4
PA5
PA6
PA7
PA8
PA9
PA10
PA11
PA12
PA13(JTMS
PA14(JTCK
PA15(JTDI)
U1
STM32H523CCUx
D6
Green LED
Chan 1
R7
680
D5
Green LED
10 MHz In
R6
680
C5
2.2uF 10V
C4
2.2uF 10V
C3
2.2uF 10V
C9
2.2uF 10V
C6
2.2uF 10V
INPUT1
INPUT2
INPUT3
INPUT4
TX
RX
J8
Debug
Input 1
P_INPUT
File: input.kicad_sch
Input 2
Input 3
Input 4
D11
Green LED
USB
R13
680
D9
Green LED
Chan 4
R10
680
D8
Green LED
Chan 3
R9
680
D7
Green LED
Chan 2
R8
680
Sheet: /
File: Timestamper.kicad_sch
Title:
Size: A4
Date:
Rev:
KiCad E.D.A. 10.0.1
Id: 1/5

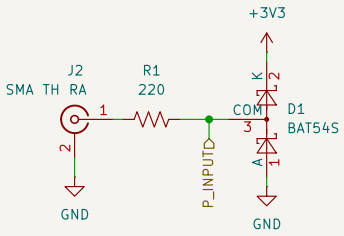

Sheet: /Input 1/
File: input.kicad_sch

Title:

Size: A4	Date:	**Rev:**
KiCad E.D.A. 10.0.1		Id: 2/5

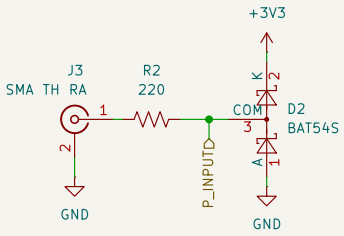

Sheet: /Input 2/
File: input.kicad_sch

Title:

Size: A4	Date:	**Rev:**
KiCad E.D.A. 10.0.1		Id: 3/5

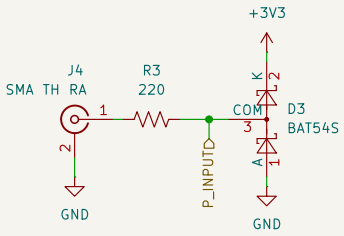

Sheet: /Input 3/
File: input.kicad_sch

Title:

Size: A4	Date:	**Rev:**
KiCad E.D.A. 10.0.1		Id: 4/5

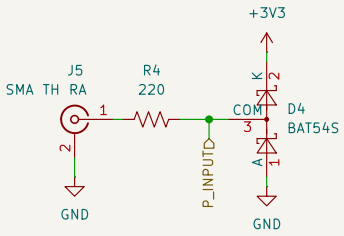

Sheet: /Input 4/
File: input.kicad_sch

Title:

Size: A4	Date:	**Rev:**
KiCad E.D.A. 10.0.1		Id: 5/5